HYDRAULIC SEPARATORS
BUFFER TANK

NST
NILES
STEEL
TANK
SINCE1898

BARE
R-16 TOPCOAT
JACKETED & INSULATED
120 to 860 gallons

Larger sizes available

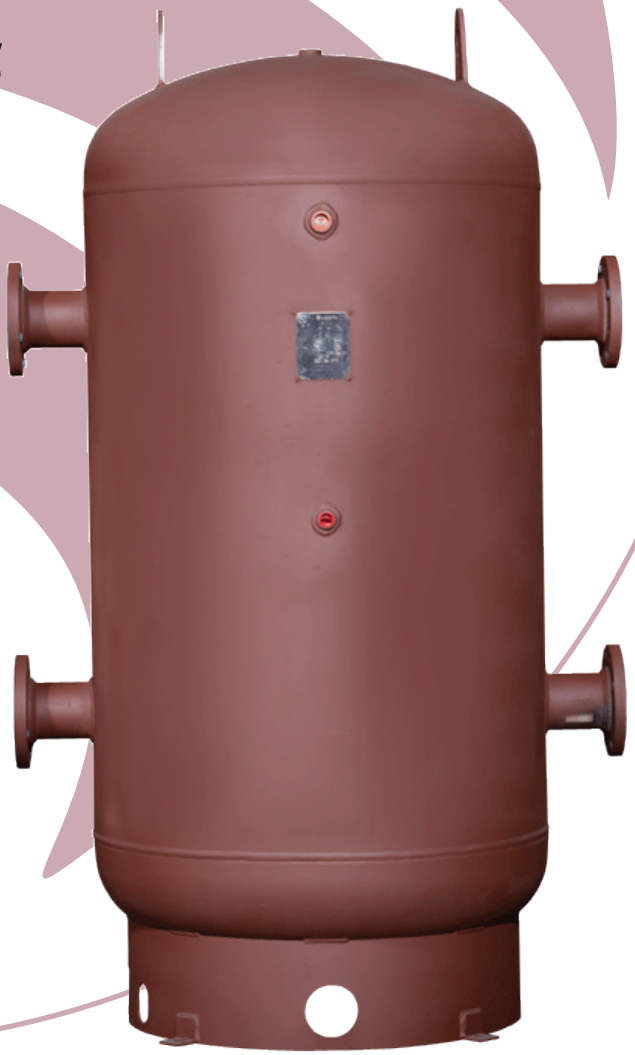

Standard:
ASME Sec. VIII, Div 1
125 psi
Bare tank
5 year warranty
4" base ring

NILES STEEL TANK • 1701 TERMINAL ROAD • PO BOX 728 • NILES • MI • 49120
PHONE • 269-683-1910 FAX • 269-683-1953 WWW.nilesst.com

A SUBSIDIARY OF BRADFORD WHITE CORPORATION

The Niles Steel Tank Hydraulic Separator is designed to help reduce short cycling of a boiler system and separate building and boiler circulation. The NST Hydraulic Separator uses stored boiler water to buffer the system load when the boiler is producing more BTU's than what the building can handle. When the building has a minimal demand, it pulls from the tank allowing the boiler to "rest". The Hydraulic Separator is piped so the building flow is separate from the boiler flow, allowing independent circulation.

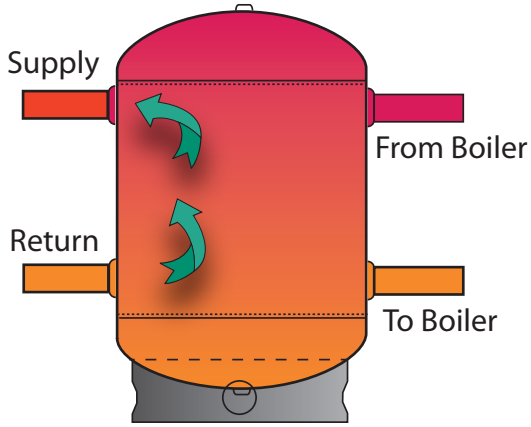

(Fig. A)

Circulation from building

The Hydraulic Separator acts as a decoupler allowing independent circulation in both building and boiler loops. When the building's hydronic system has a demand for heat, the buildings circulation pumps pull from the hydraulic separator (fig A.) until there is enough temperature drop in the tank to activate the boiler. When this occurs both boiler and buildings circulation pumps are activated allowing direct flow through the tank (Fig. B). As the building demand is satisfied and it's circulation pumps are stopped, there is still a demand in the tank to return it to it's operating temperature (Fig. C) . The boiler will continue to circulate and fire until the tanks temperature is satisfied.

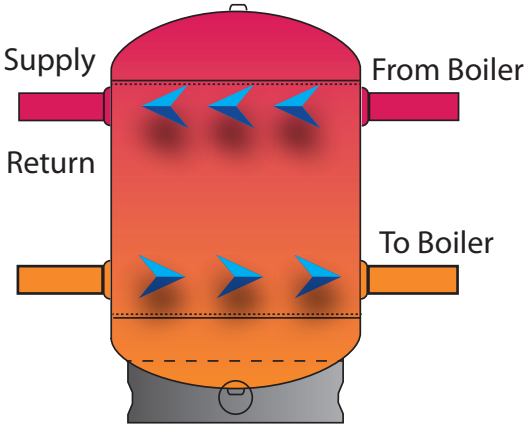

(Fig. B)

Flow through circulation

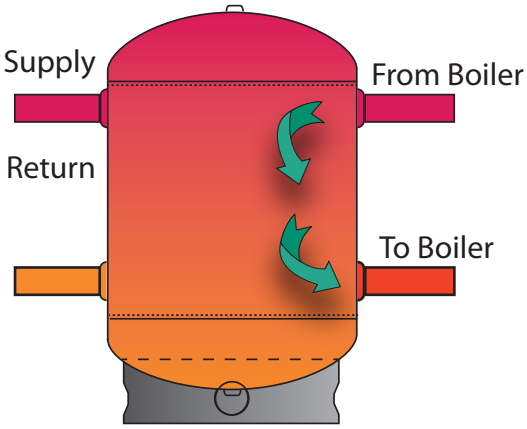

(Fig. C)

Circulation from boiler

The Niles Steel Tank Hydraulic Separators are designed for 125 psi (150 optional).
Standard sizes range from 120 gallon up to 860 actual gallons.
Custom sizes and additional fittings are available.

NILES STEEL TANK • 1701 TERMINAL ROAD • PO BOX 728 • NILES • MI • 49120
PHONE • 269-683-1910 FAX • 269-683-1953 www.nilesst.com

A SUBSIDIARY OF BRADFORD WHITE CORPORATION

To properly size the capacity of the Hydraulic Separator, 4 variables are needed:

1. The minimum "run time" of the boiler. Check with your boiler equipment manufacturer for their recommended minimum run time.

2. The minimum BTU output (BTU/hr). The minimum BTU output is based on the boiler output at the minimum firing rate, if equipped with a variable input system that modulates the firing rate down as the demand decreases.

3. The minimum system (heat) load (BTU/hr). Based on the smallest zone calling for heat.

4. Tank delta T for allowable temperature rise. For hydronic heating systems typically allow between 10 and 40 degree rise in tank temperature.

V = Tank volume

T = Min. boiler run time

MBO = Minimum Boiler Output (btu/ hr)

MHL = Minimum Heat Load

Delta T = Tank temp rise (degrees F)

$$V = \frac{T * (MBO - MHL)}{Delta\ T * 500}$$

Model	Actual Gallons	Nominal Gallons	NPT/Flg	A	B	C	D	E
SEP-30-045	120	138	3" NPT	49"	30"	16.75"	36.25"	4"
SEP-30-071	200	217	3" NPT	75"	30"	16.75"	62.25"	4"
SEP-36-072	285	317	4" Flg	76"	36"	24.5"	55.5"	4"
SEP-42-072	385	432	4" Flg	76"	42"	27"	53"	4"
SEP-42-083	450	498	4" Flg	87"	42"	27"	64"	4"
SEP-48-096	675	752	4" Flg	100"	48"	29"	75"	4"
SEP-48-120	860	940	4" Flg	124"	48"	29"	99"	4"

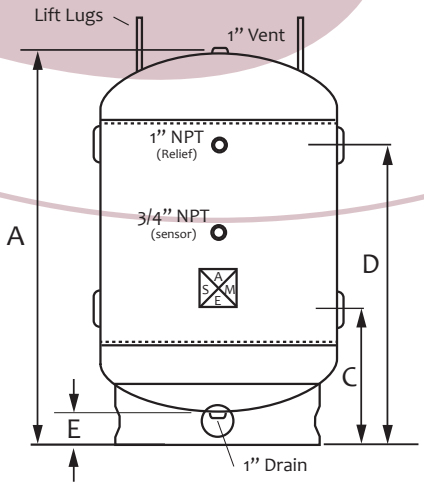

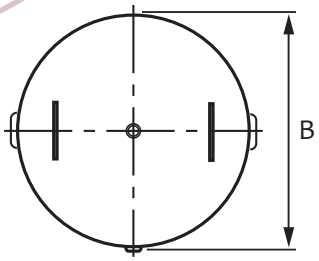

NILES STEEL TANK • 1701 TERMINAL ROAD • PO BOX 728 • NILES • MI • 49120
PHONE • 269-683-1910 FAX • 269-683-1953 www.nilesst.com

A SUBSIDIARY OF BRADFORD WHITE CORPORATION